AVOCET: Carbon dioxide

http://www-air.larc.nasa.gov

Stephanie Vay, PI
NASA Langley Research Center
Hampton, VA 23681
Stephanie.A.Vay@nasa.gov

Team Members: Yonghoon Choi, Ali Aknan, James Geiger, Charles Hudgins

The NASA Langley AVOCET instrument provides high resolution measurements of atmospheric CO_2. The instrument uses a differential, non-dispersive infrared spectrometer to detect CO_2 rapidly with high precision.

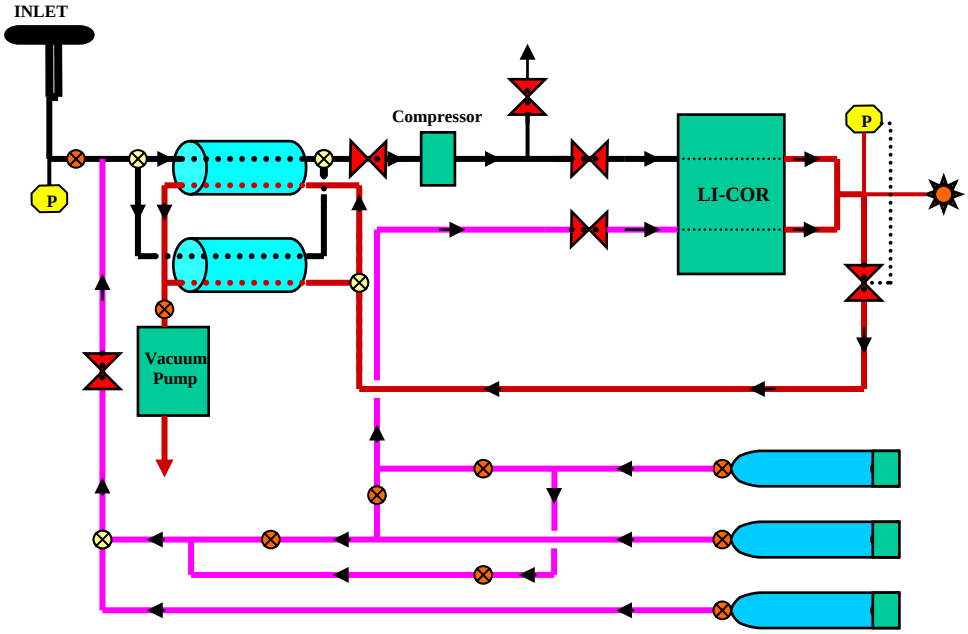

Figure 1. Schematic of the AVOCET instrument.

A modified LI-COR model 6252 infrared gas analyzer forms the basis of the CO_2 sampling system previously deployed aboard research aircraft during the PEM-West [Anderson et al., 1996; Gregory et al., 1997], PEM-Tropics [Vay et al., 1999], TRACE [Vay et al., 2003] and INTEX-NA [Choi et al., submitted 2007] mission series. The LI-COR is small (13 x 24 x 34 cm) and composed of dual 12 cm^3 volume sample/reference cells; a feedback stabilized infrared source; 500 Hz chopper; thermoelectrically-cooled solid state PbSe detector; and a narrow band (150 nm) interference filter centered on the 4.26 μm CO_2 absorption band. Using synchronous signal detection techniques, it operates by sensing the difference in light absorption between the continuously flowing sample and reference gases occupying each side of the dual absorption cell. Thus, by selecting a reference gas of approximately the same concentration as background air

(~380 ppm), very minute fluctuations in atmospheric concentration can be quantified with high precision (≤ 0.1 ppm). The system is operated at constant pressure (250 torr) and has a 0.1 second electronic time response.

During ambient sampling, air is continuously drawn through a Rosemount inlet probe, a permeable membrane dryer to remove $H_2O_{(v)}$, the LI-COR, and then exchanged through a vacuum pump that vents overboard. In-flight calibrations are performed every 15 minutes using reference gases traceable to the primary standards maintained by WMO Central CO_2 Laboratory. By interpolating between these calibrations, slow drifts in instrument response are effectively suppressed, yielding high precision values. Temperature control of the instrument minimizes thermal drift thus maximizing ambient sampling time by decreasing the calibration frequency. AVOCET's CO_2 measurement accuracy (± 0.25 ppm) is closely tied to the accuracy of the standards obtained from NOAA ESRL, Boulder, CO prior to the mission.

References

Anderson, B. E., G. L. Gregory, J. E. Collins, Jr., G. W. Sachse, T. J. Conway, and G. P. Whiting, Airborne Observations of the Spatial and Temporal Variability of Tropospheric Carbon Dioxide, *J. Geophys. Res.*, 101(D1), 1985-1997, 1996.

Choi, Y., S. A. Vay, K. P. Vadrevu, A. J. Soja, J.-H. Woo, S. R. Nolf, G. W. Sachse, G. S. Diskin, D. R. Blake, N. J. Blake, H. B. Singh, M. A. Avery, A. Fried, L. Pfister, and H. E. Fuelberg, Characteristics of the Atmospheric CO_2 Signal as Observed over the Conterminous United States during INTEX-NA, *J. Geophy. Res.*, submitted, 2007.

Gregory, G. L., J. T. Merrill, M. C. Shipham, D. R. Blake, G. W. Sachse, and H. B. Singh, Chemical characteristics of tropospheric air over the Pacific Ocean as measured during PEM-West B: Relationship to Asian outflow and trajectory history, *J. Geophys. Res.*, 102 (D23), 28,275-28,285, 1997.

Vay, S. A., J.-H. Woo, B. E. Anderson, K. L. Thornhill, D. R. Blake, D. J. Westberg, C. M. Kiley, M. A. Avery, G. W. Sachse, D. G. Streets, Y. Tsutsumi, and S. R. Nolf, Influence of regional-scale anthropogenic emissions on CO_2 distributions over the western North Pacific, *J. Geophys. Res.*, 108(D20), 8801, doi:10.1029/2002JD003094, 2003.

Vay, S. A., B. E. Anderson, T. J. Conway, G. W. Sachse, J. E. Collins, Jr., D. R. Blake, and D. J. Westberg, Airborne observations of the tropospheric CO_2 distribution and its controlling factors over the South Pacific Basin, *J. Geophys. Res.*, 104(D5), 5663-5676, 1999.